Ergo-Series E7 Barrel Sauna

71D" x 81H"



Note: Please read manual before construction

Rev 4/2023

Front & Back Walls

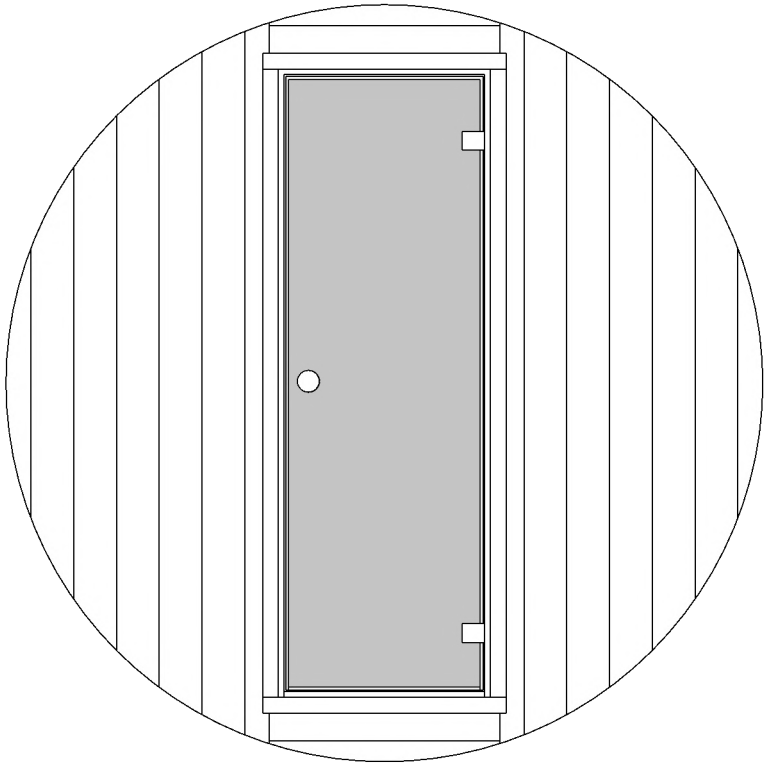

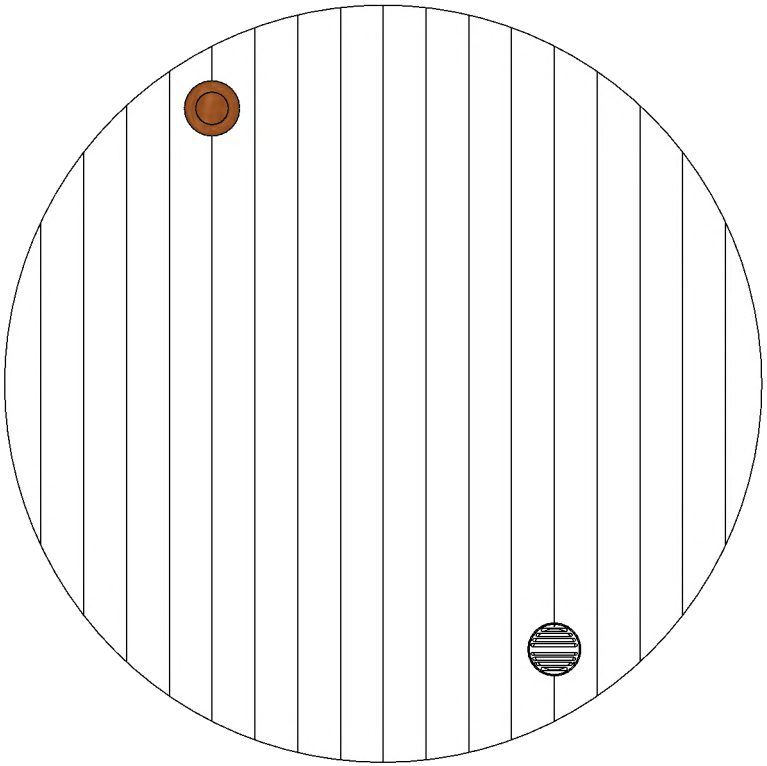

E7 Barrel Sauna 71D" x 81H"

Details list.

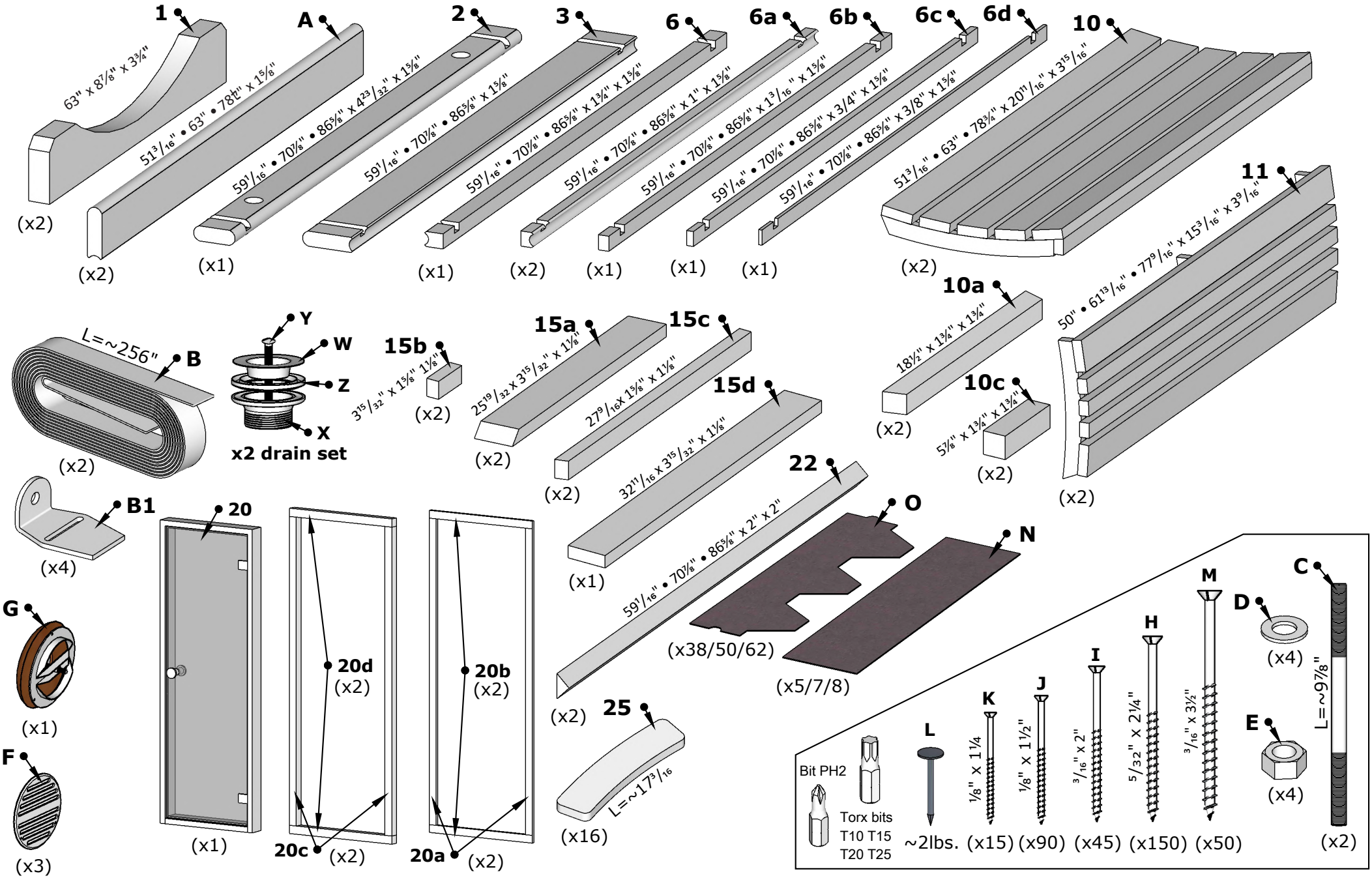

Tools needed

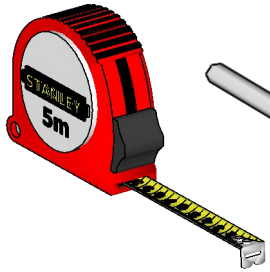

Measuring tape

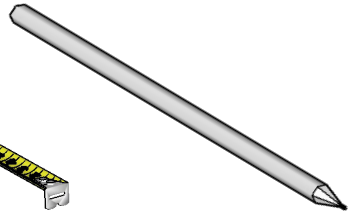

Marker pen

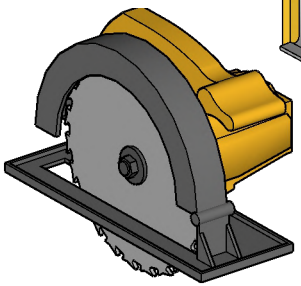

Circular saw

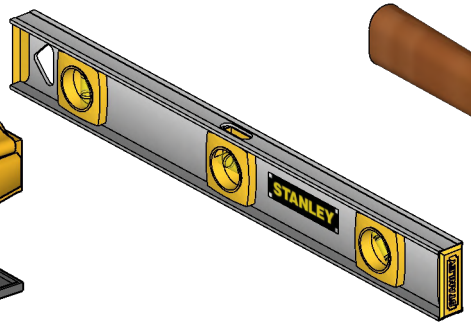

Water level

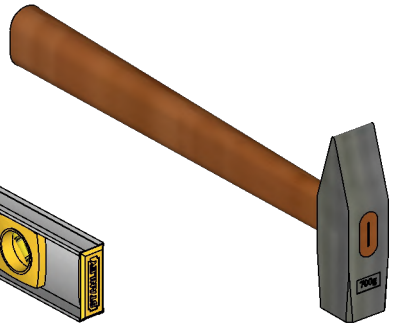

Hammer



Extra hands



Ratchet strap

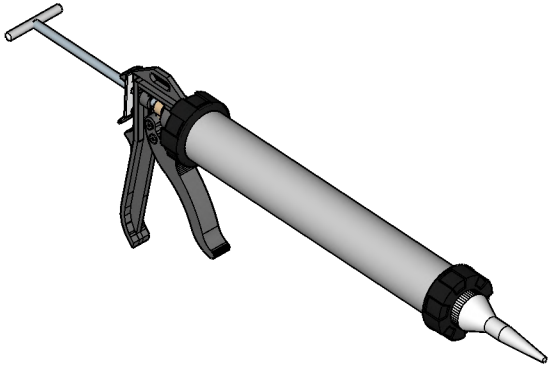

Silicone gun
(Only glass-wall models)

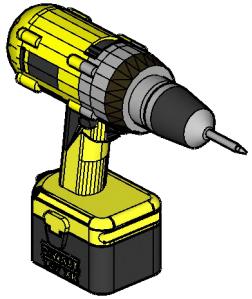

Drill

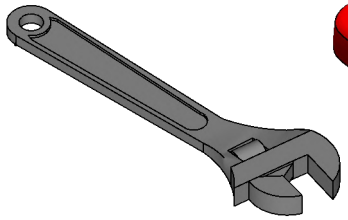

Cresent wrench

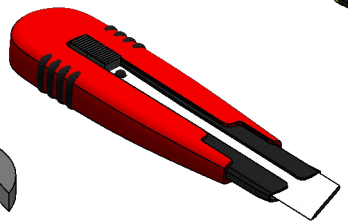

Utility knife

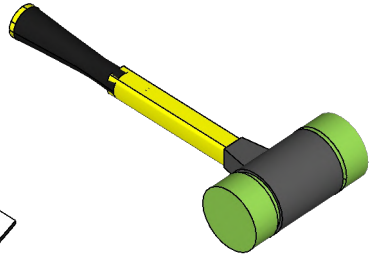

Rubber mallet

Wooden front wall installation

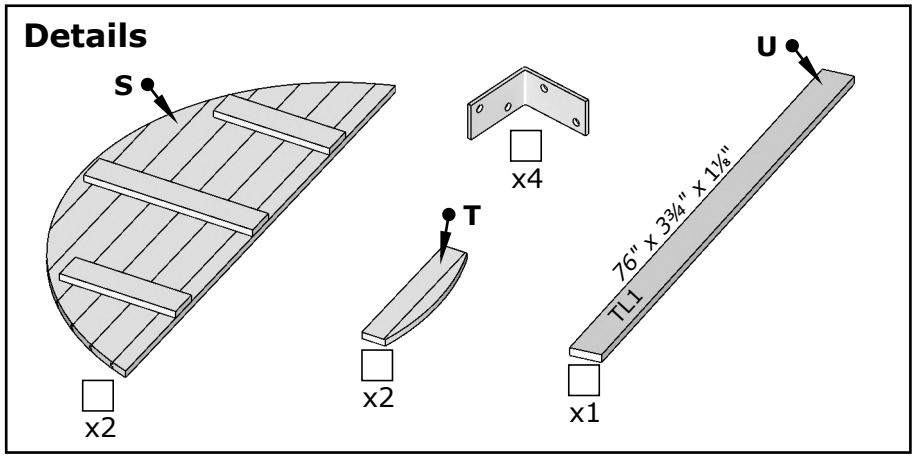

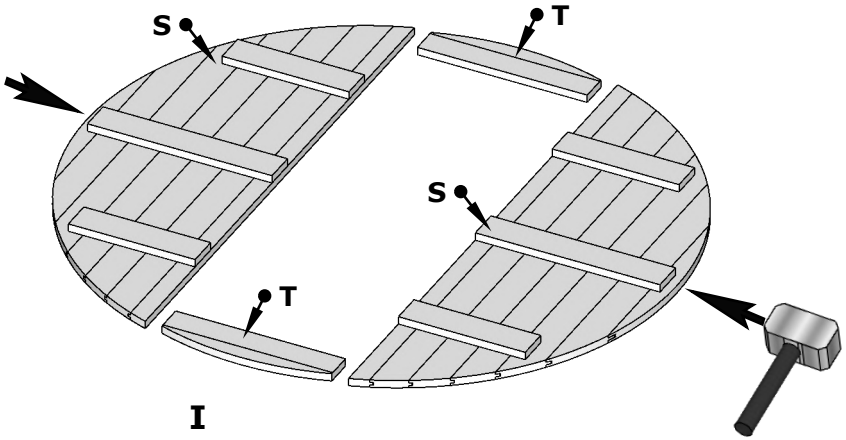

I

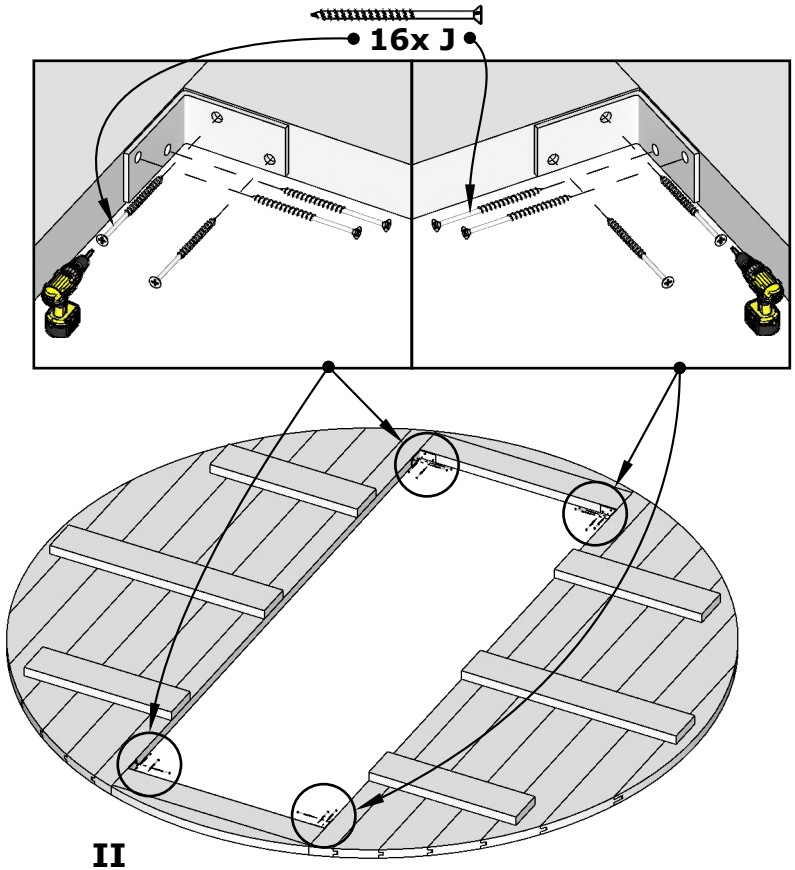

II

DET U Fix it diagonally to make wall more rigid during the installation.

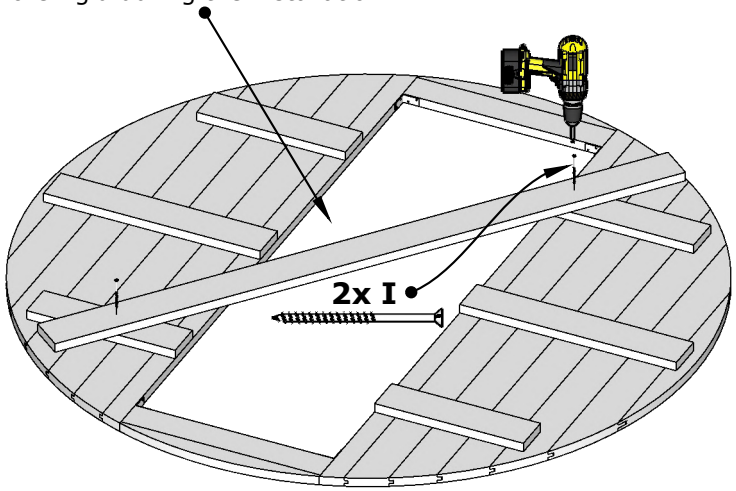

III

Wooden back wall installation

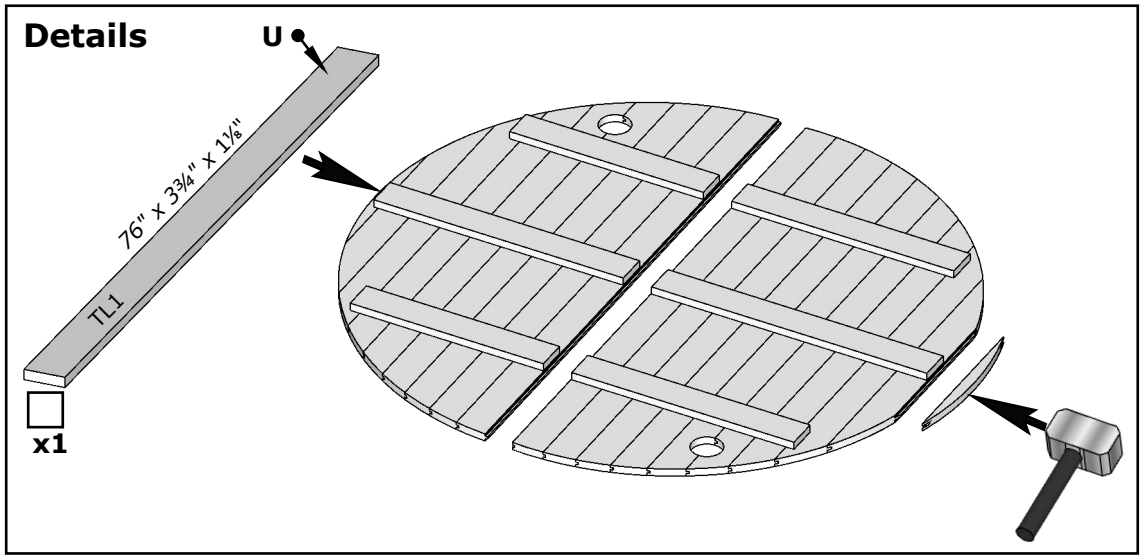

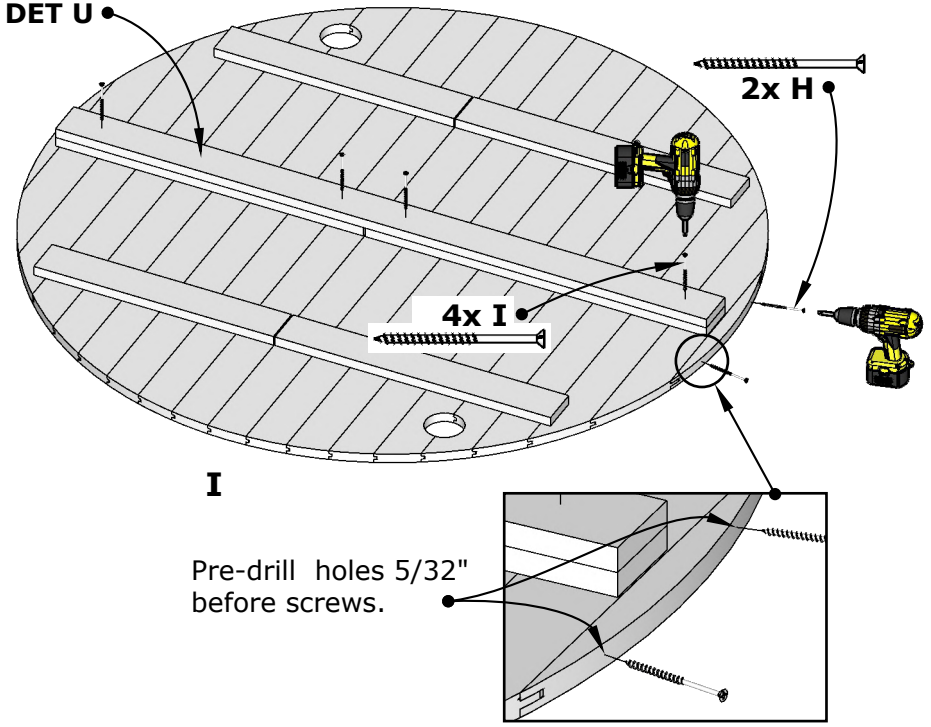

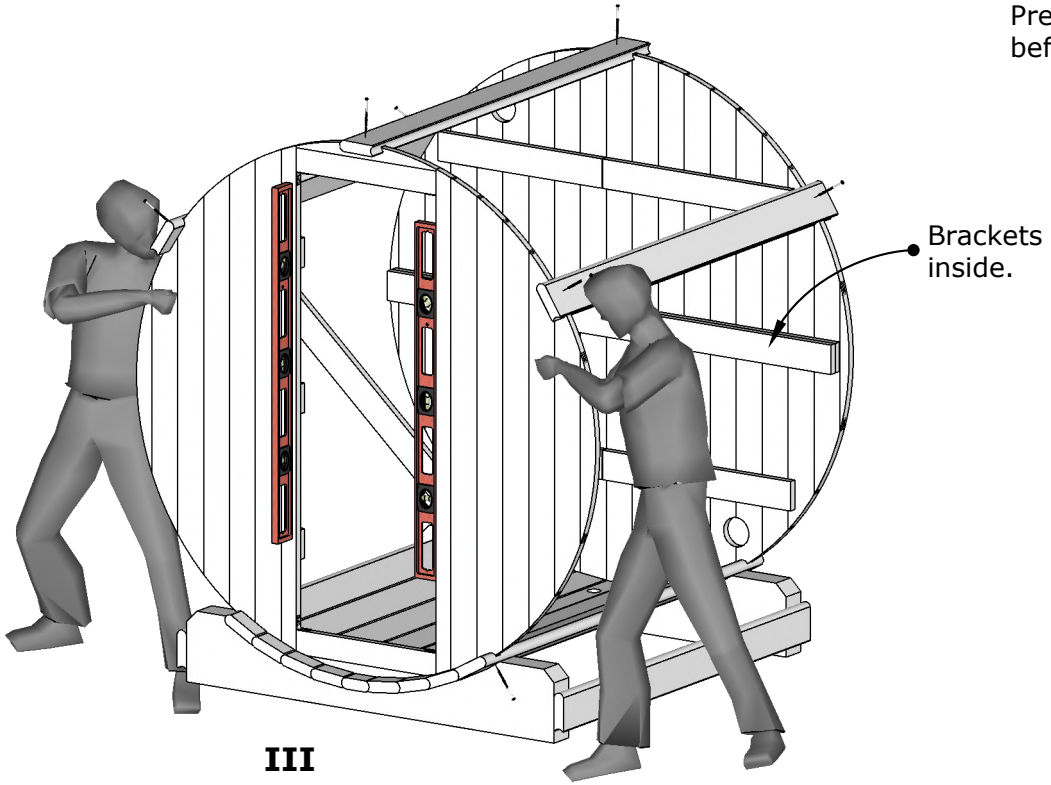

E7 Barrel Sauna 71D" x 81H"

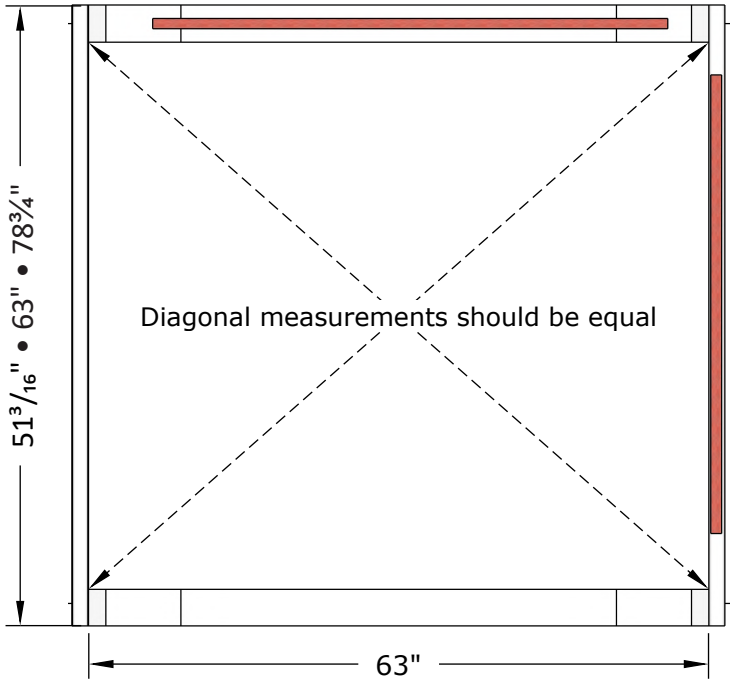

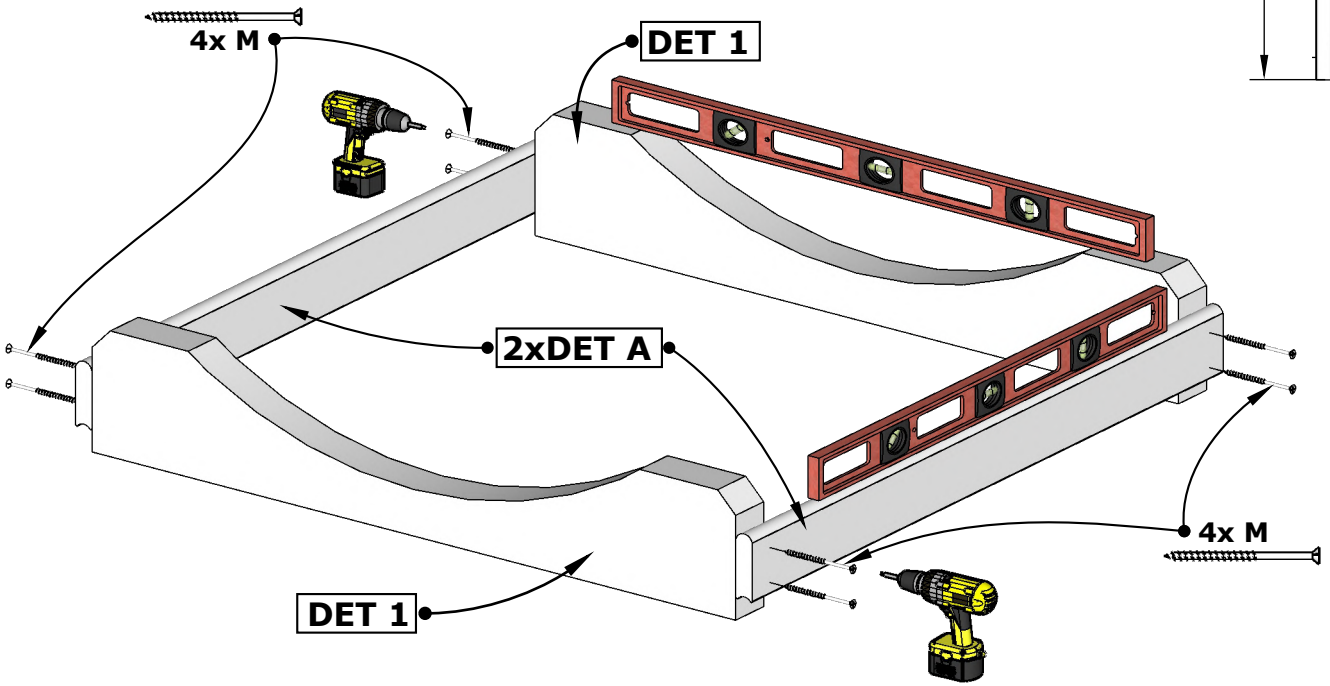

1.

E7 Barrel Sauna 71D" x 81H"

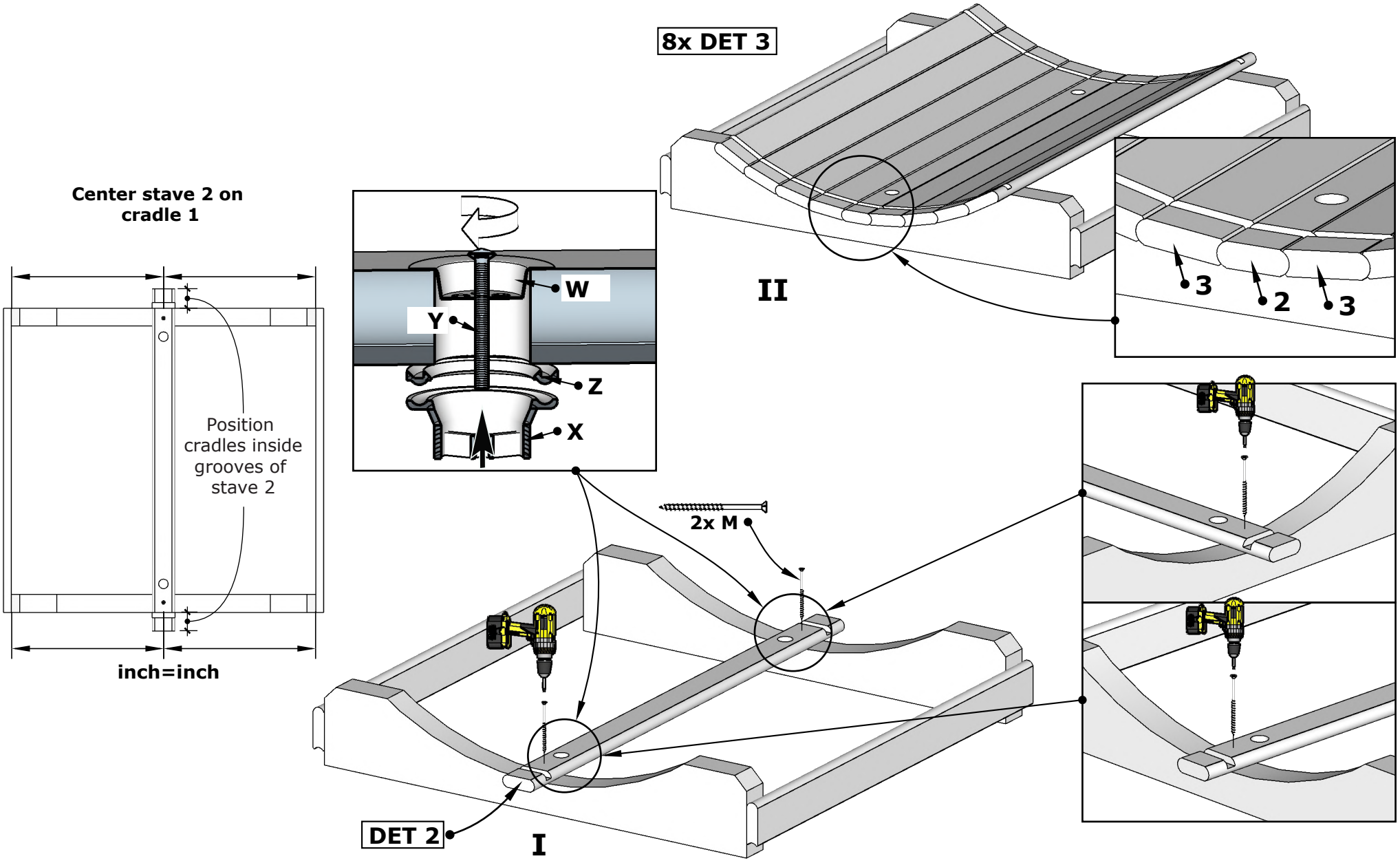

2.

E7 Barrel Sauna 71D" x 81H"

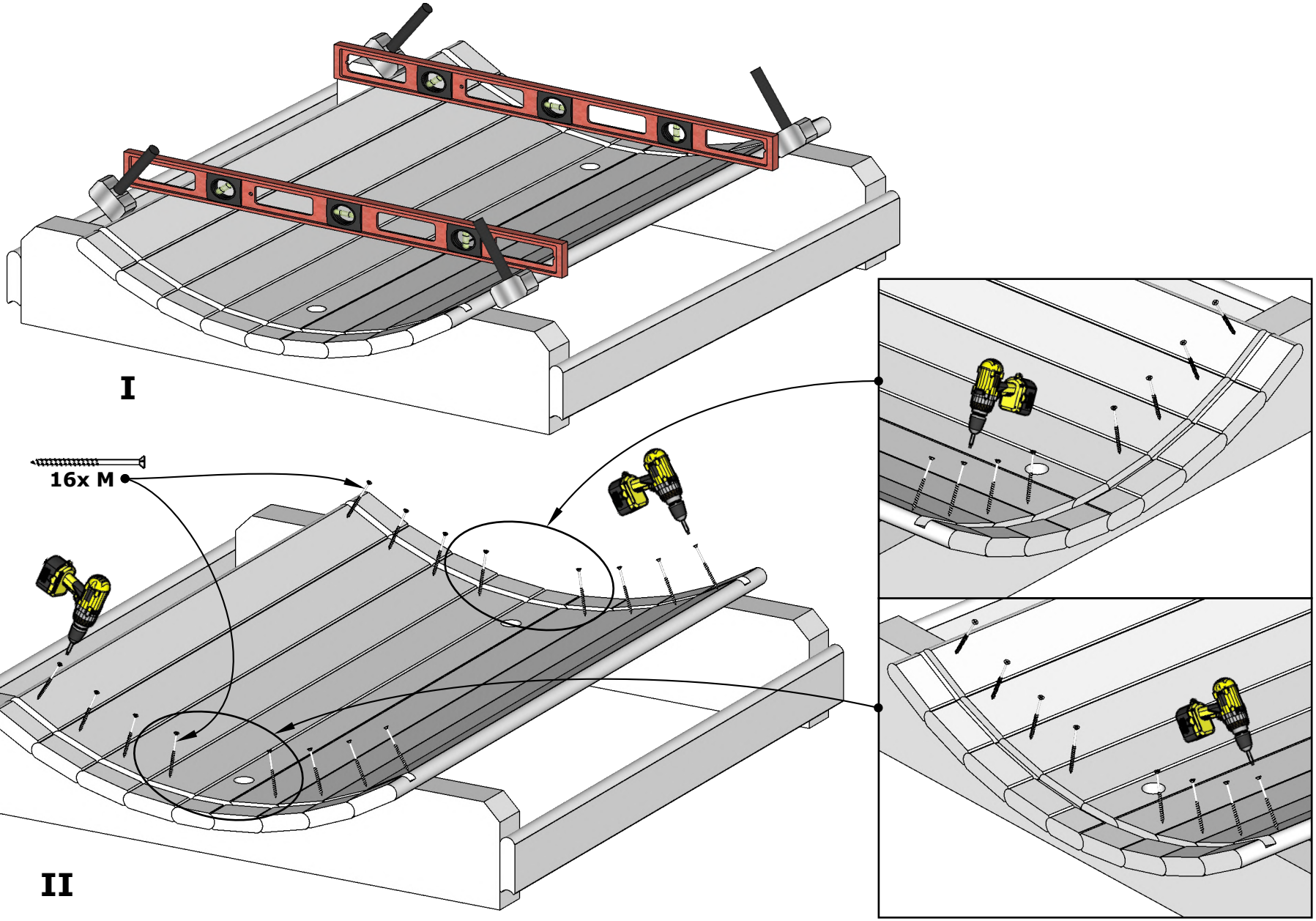

3.

E7 Barrel Sauna 71D" x 81H"

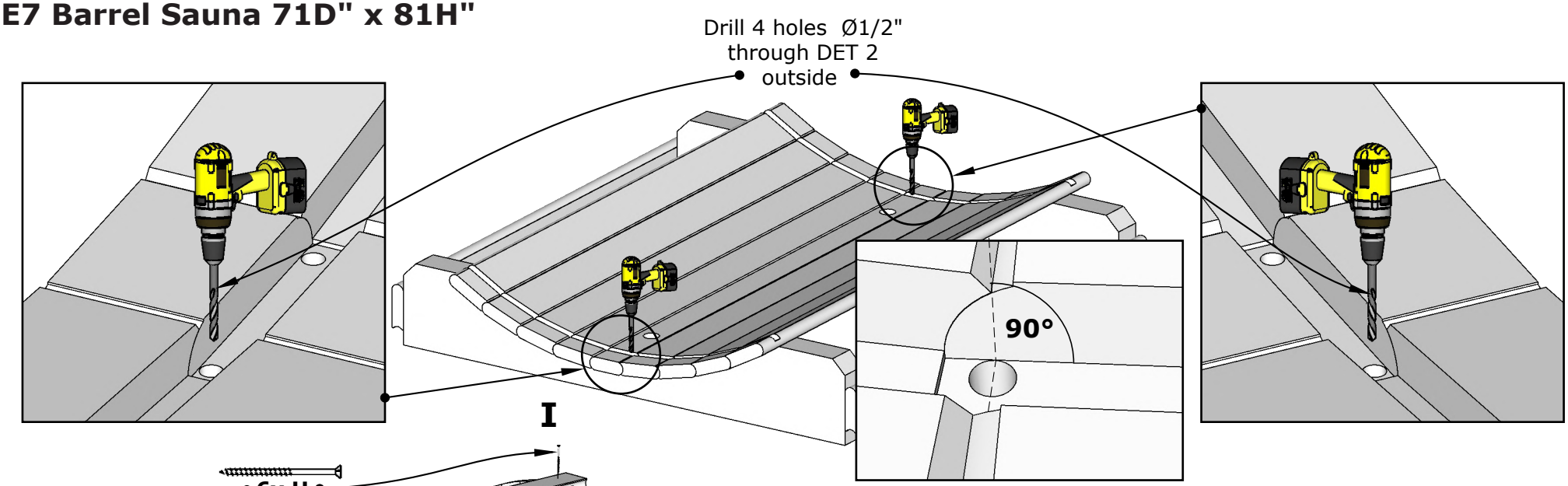

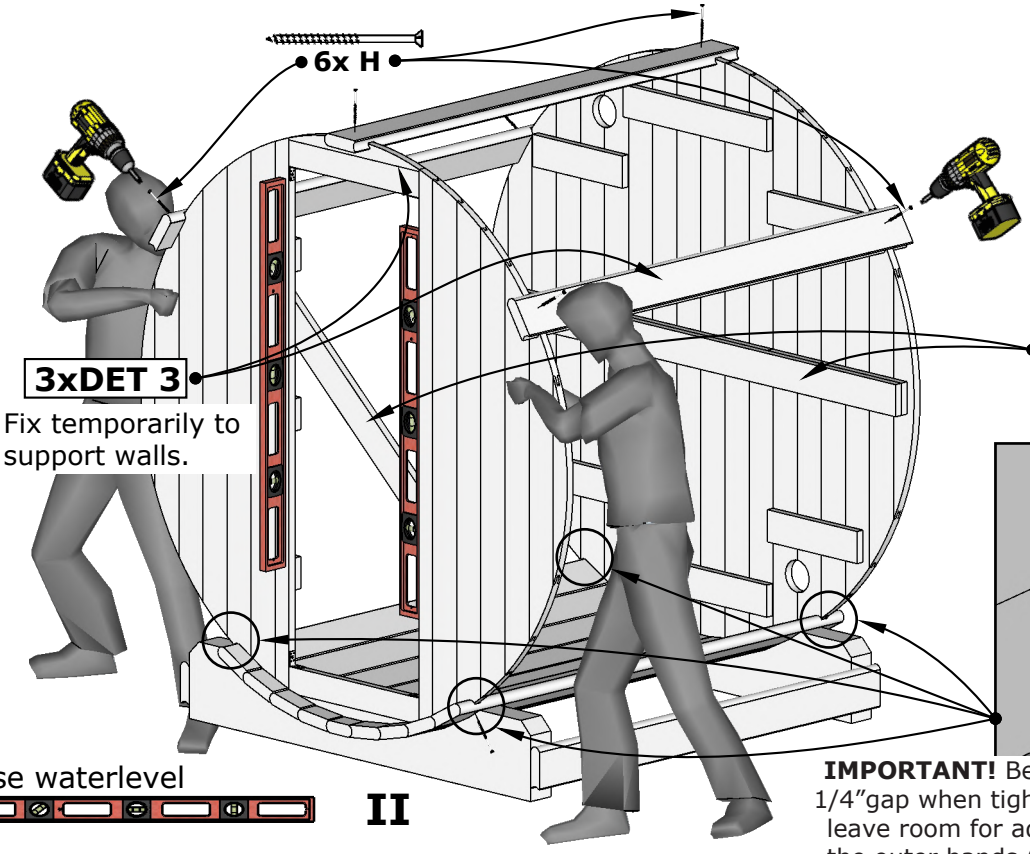

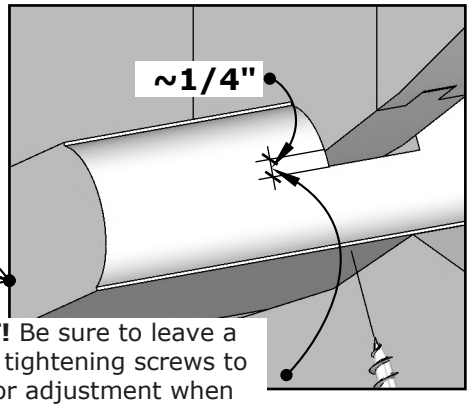

IMPORTANT! Be sure to leave a 1/4”gap when tightening screws to leave room for adjustment when the outer bands (B) are installed.

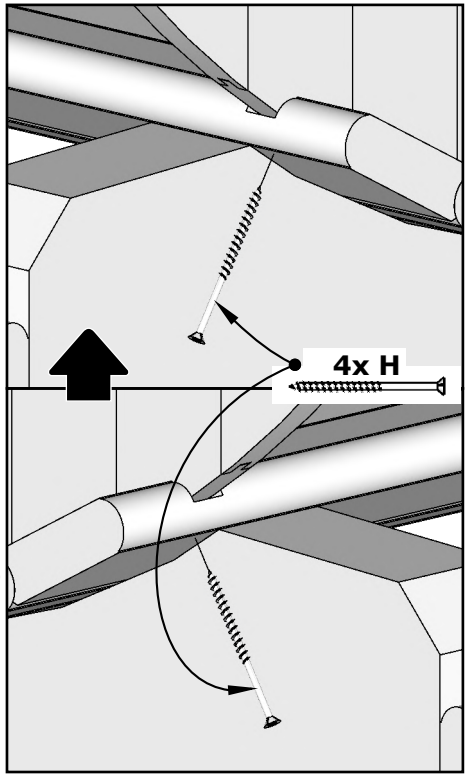

E7 Barrel Sauna 71D" x 81H"

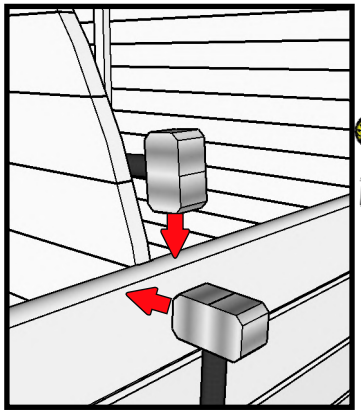

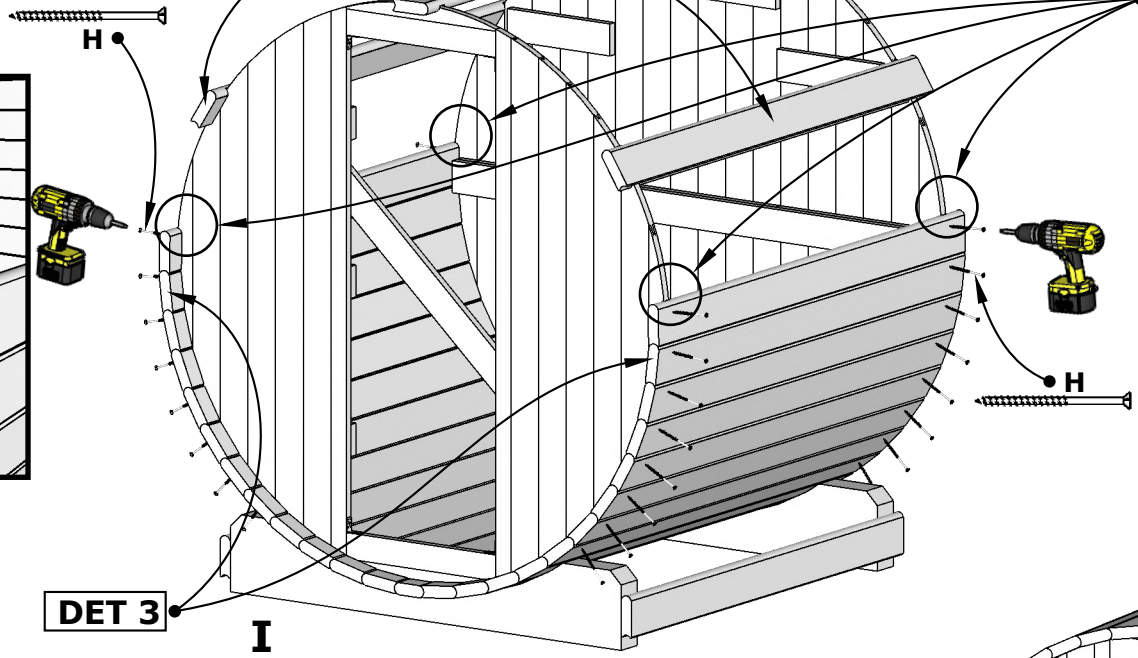

I

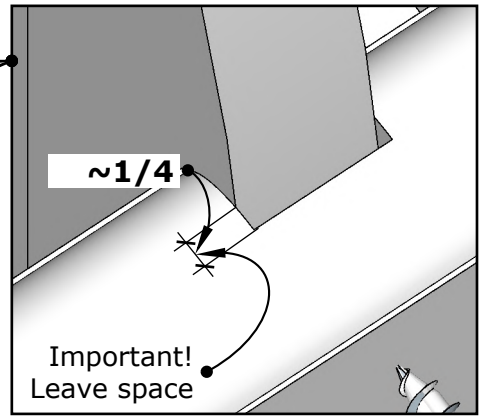

IMPORTANT! Be sure to leave a 1/4" gap when tightening screws to leave room for adjustment when the outer bands (B) are installed.

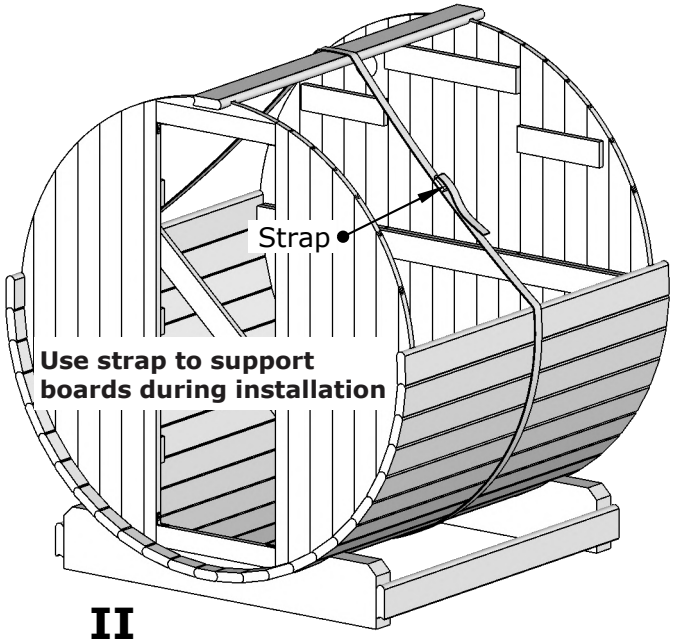

II

See the next page.

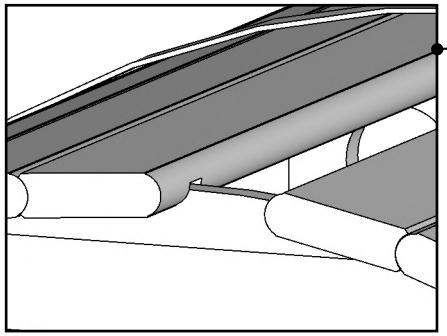

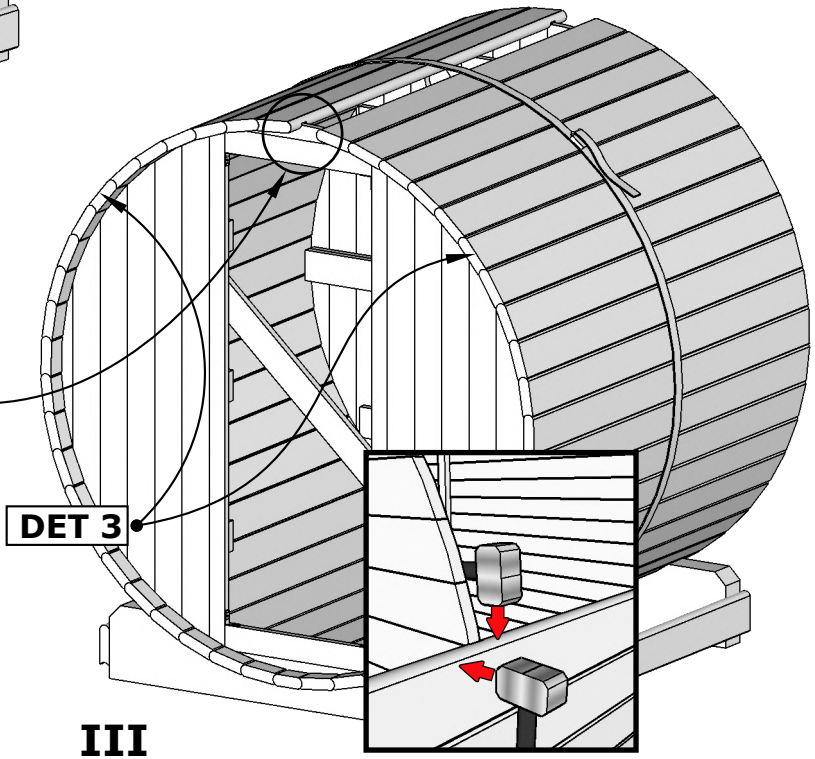

III

E7 Barrel Sauna 71D" x 81H"

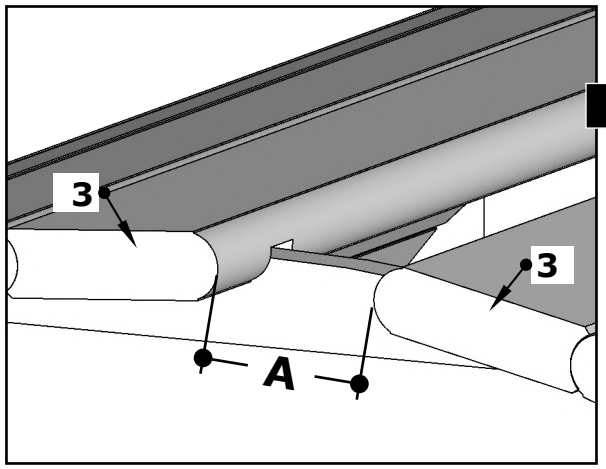

I

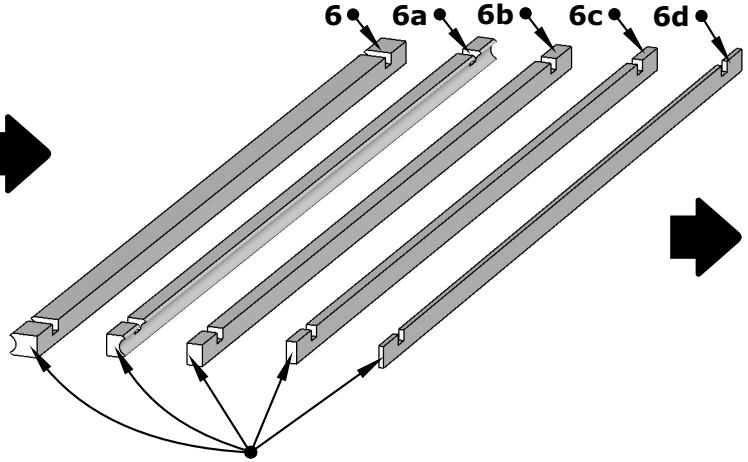

Join two boards together (as shown in diagram II) that will bridge the width of the "A" gap. It is recommended that the combined boards are approximately 1/4" wider than the gap.

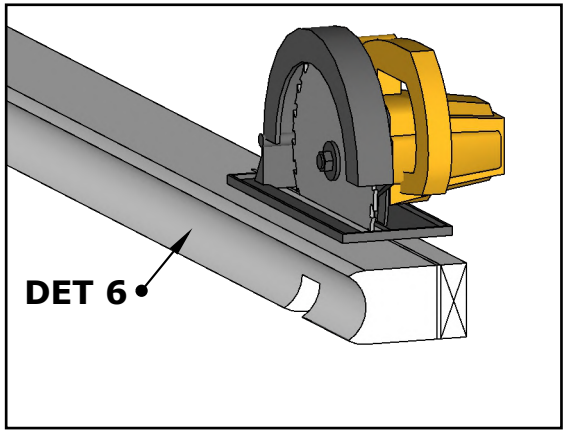

If needed, trim the flat edge of the board to create the desired width.

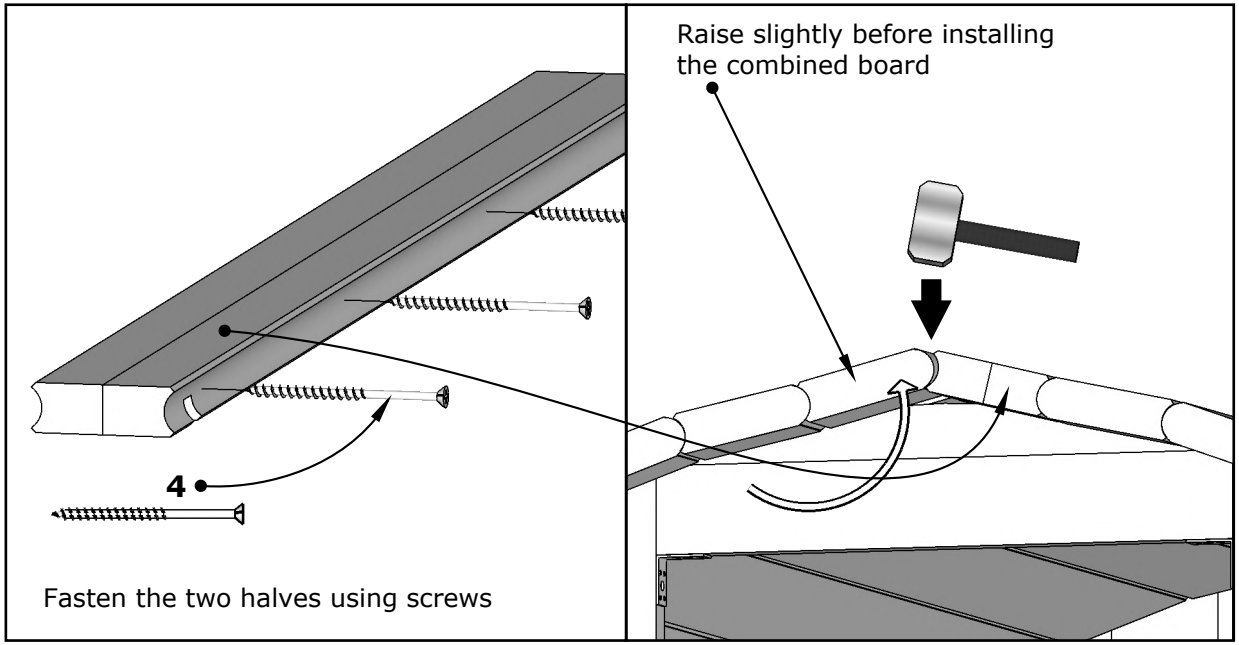

II

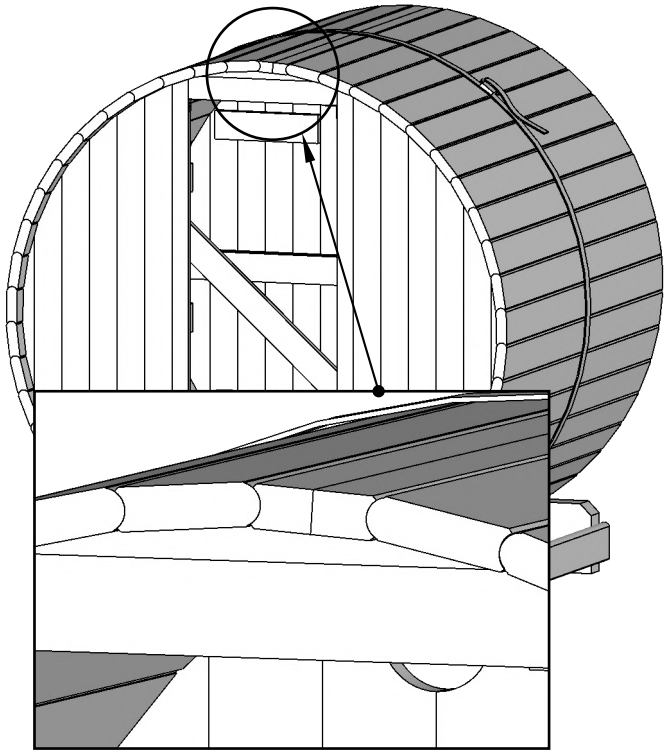

III

E7 Barrel Sauna 71D" x 81H"

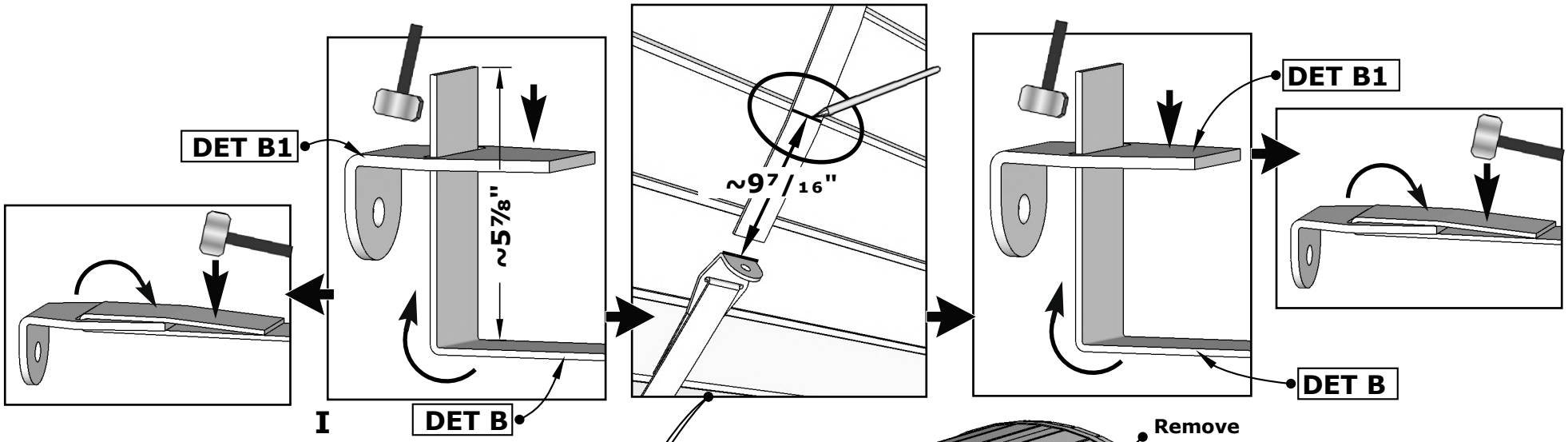

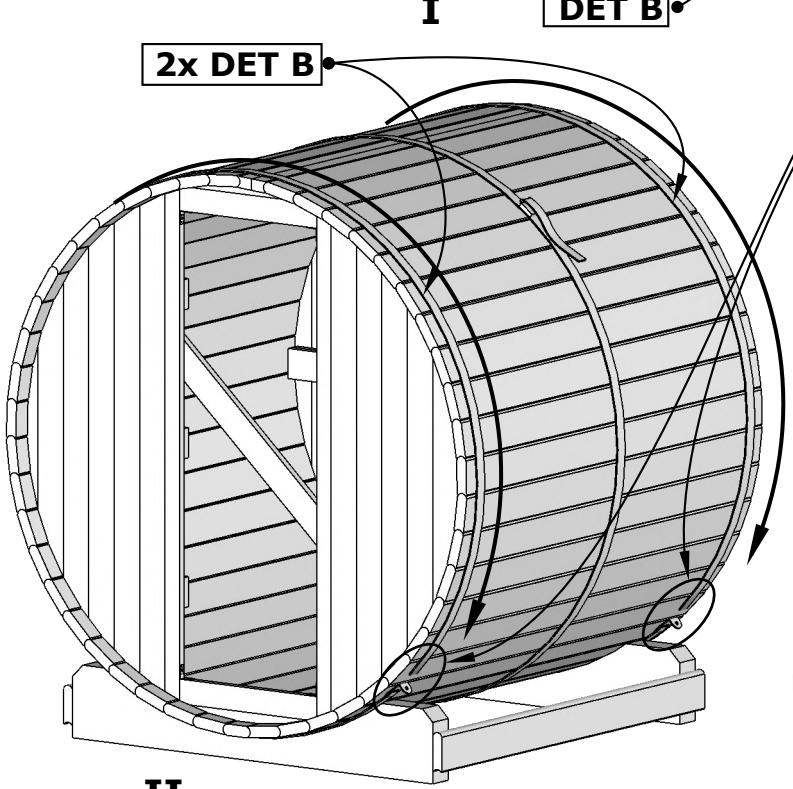

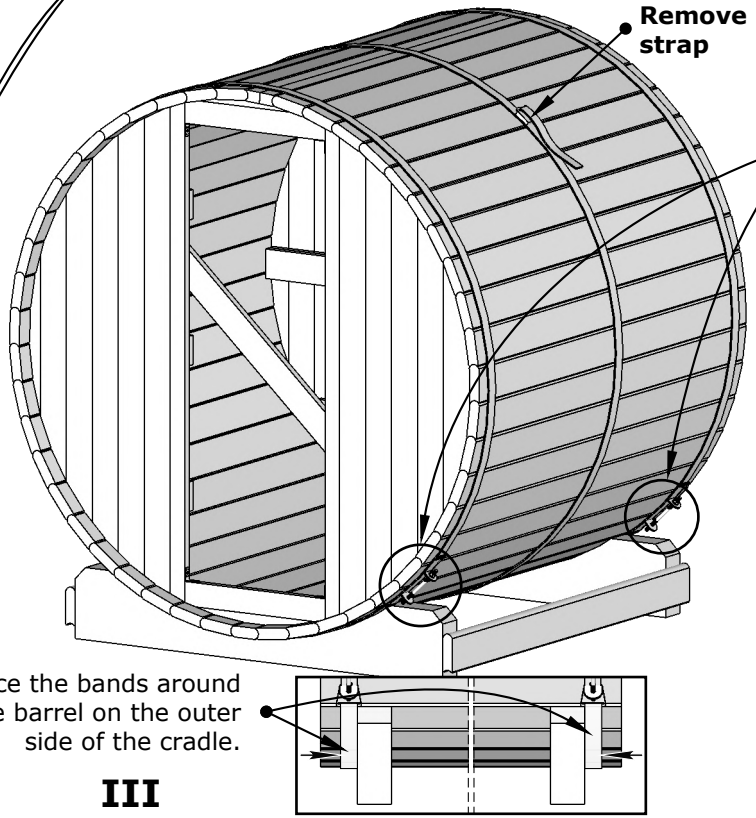

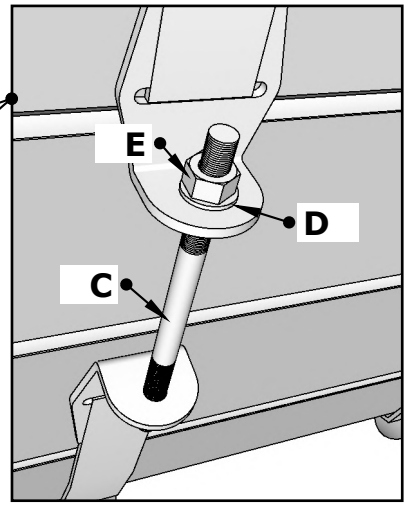



7.

E7 Barrel Sauna 71D" x 81H"

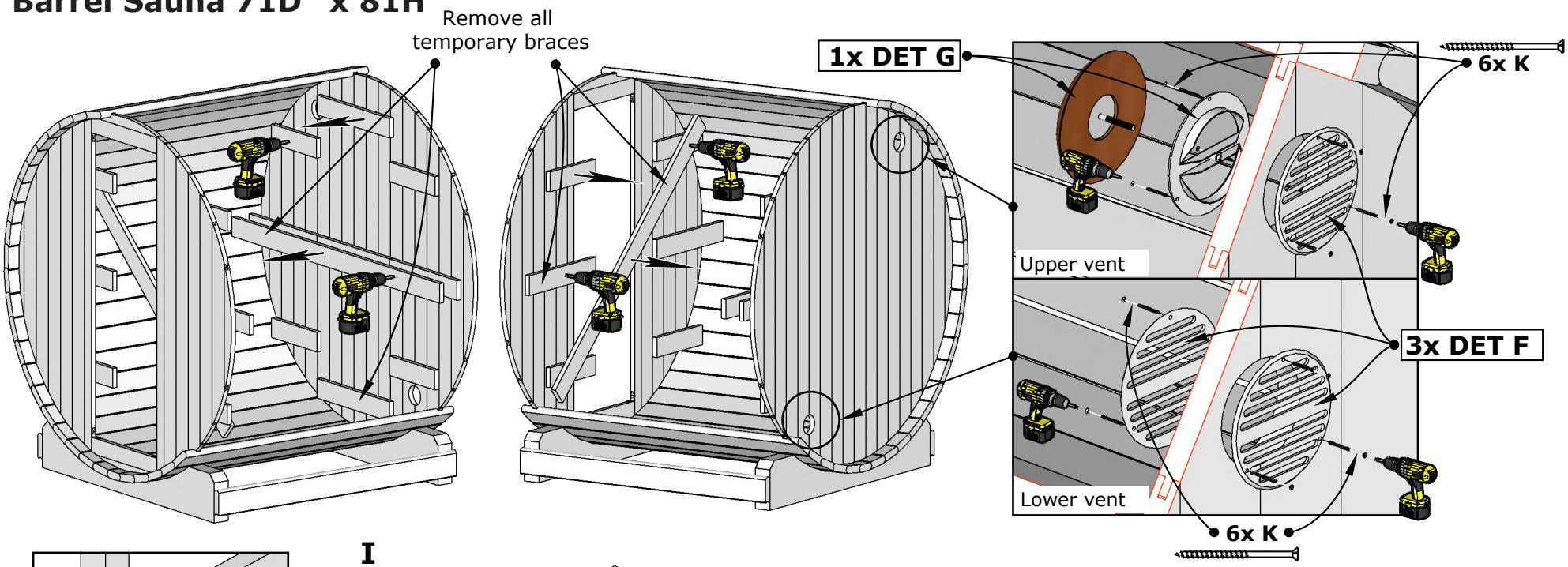

I

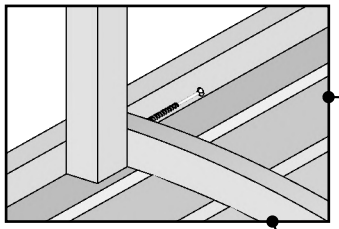

Pre-drill holes Ø5/32"
before screws.

72" and 88" Saunas
with front-glass wall
have 4 pc. of DET 10a.

II

NB! If Your sauna equipped with front-glass wall, see front-glass wall installation manual for proper benches installation.

III

E7 Barrel Sauna 71D" x 81H"

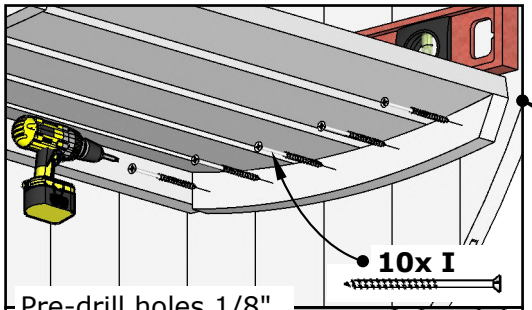

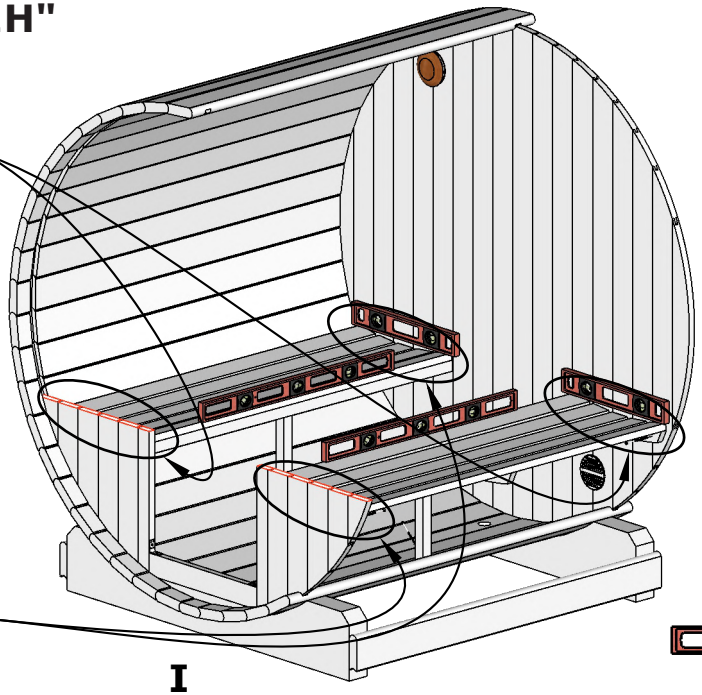

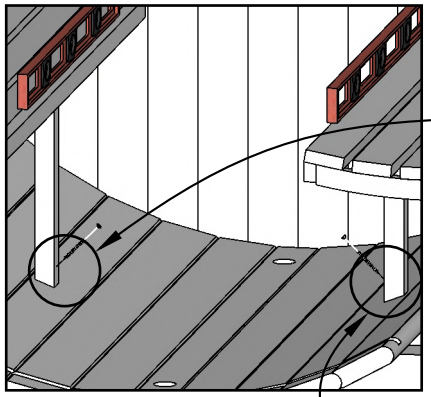

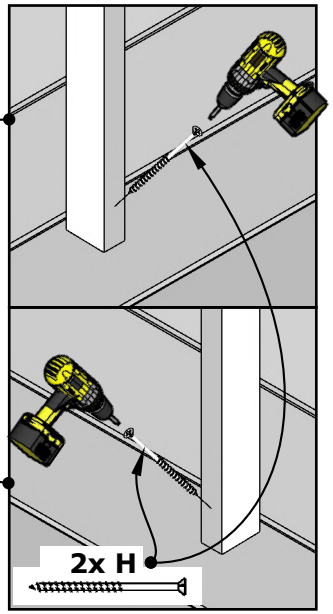

Use level for installation of benches



I

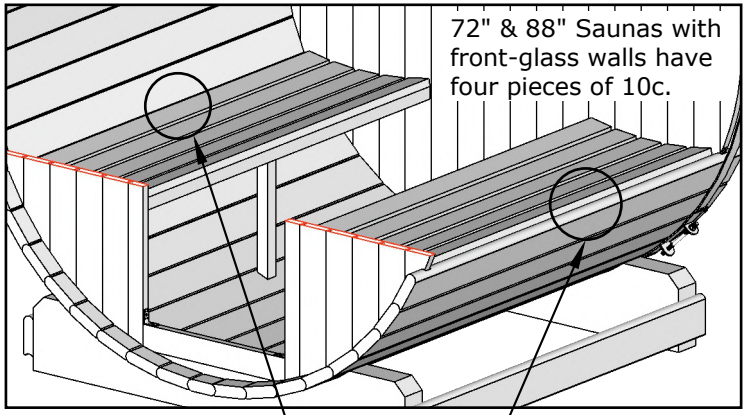

Under the benches

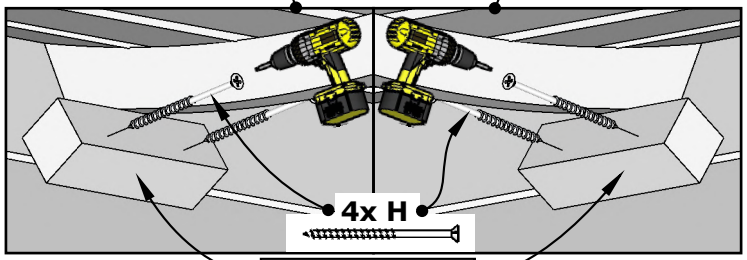

II

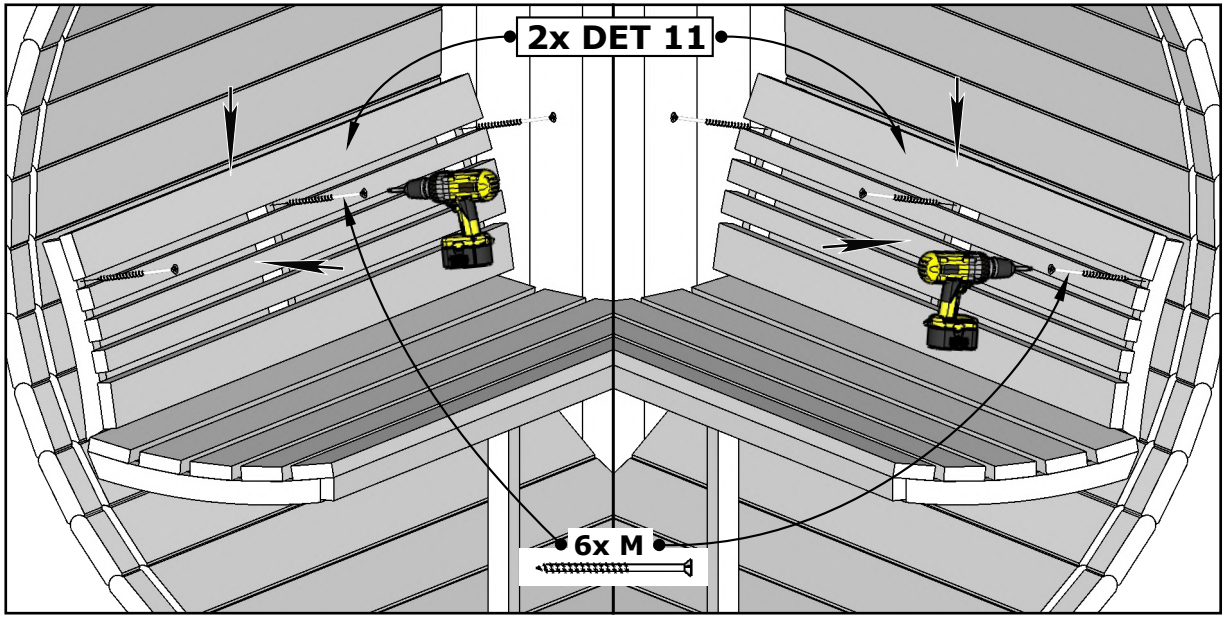

III

E7 Barrel Sauna 71D" x 81H"

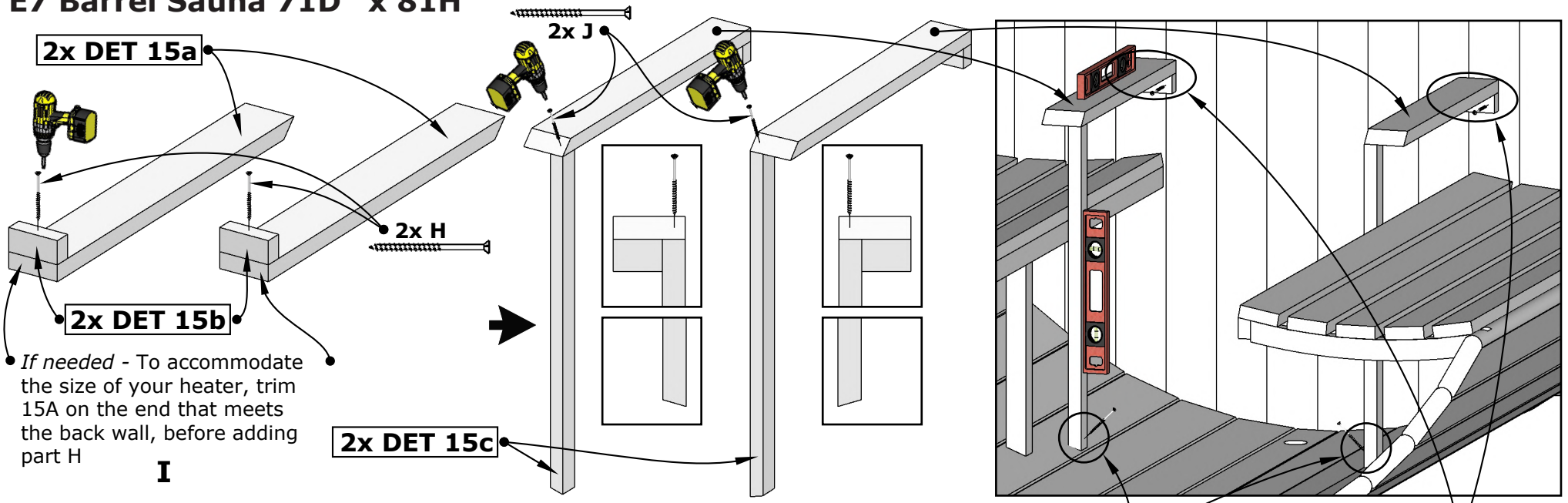

If needed - To accommodate the size of your heater, trim 15A on the end that meets the back wall, before adding part H

I

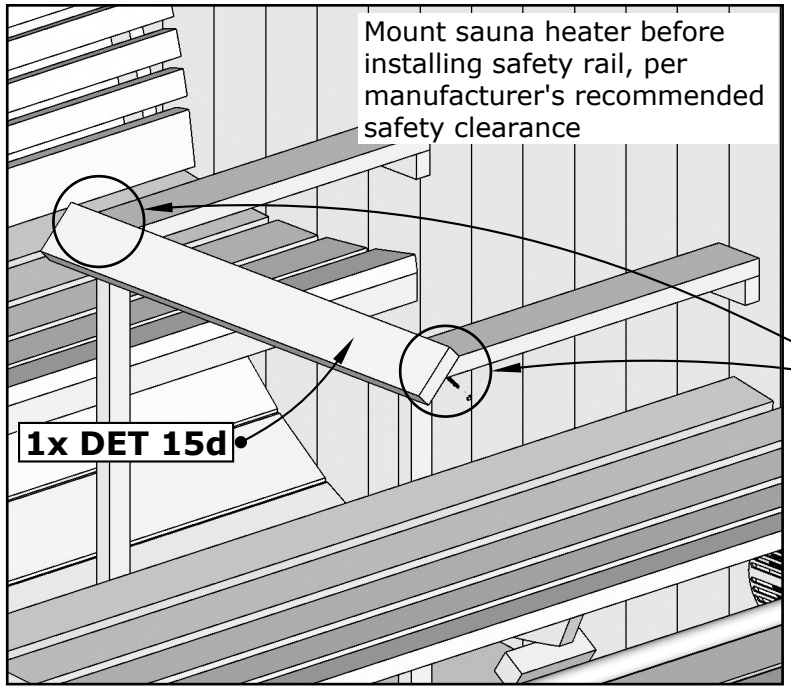

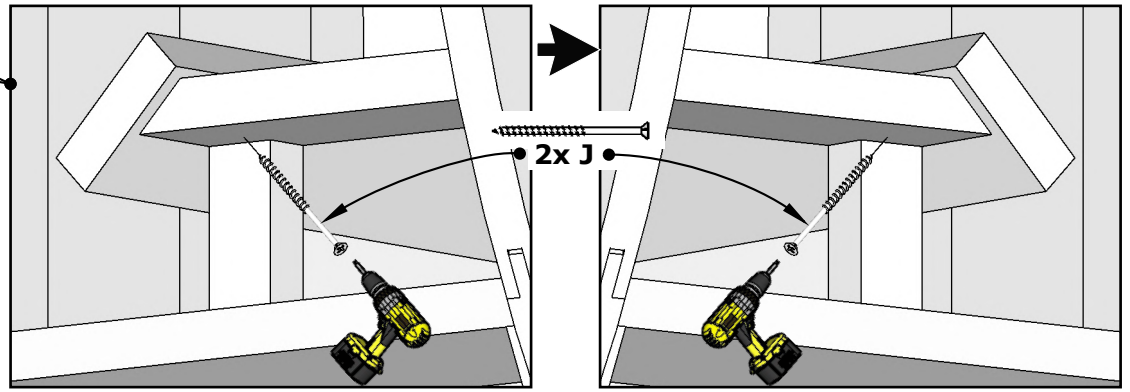

II

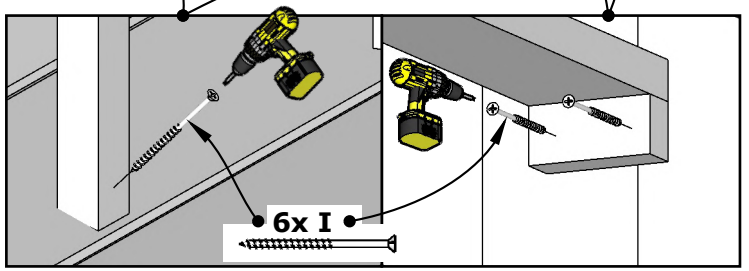

E7 Barrel Sauna 71D" x 81H"

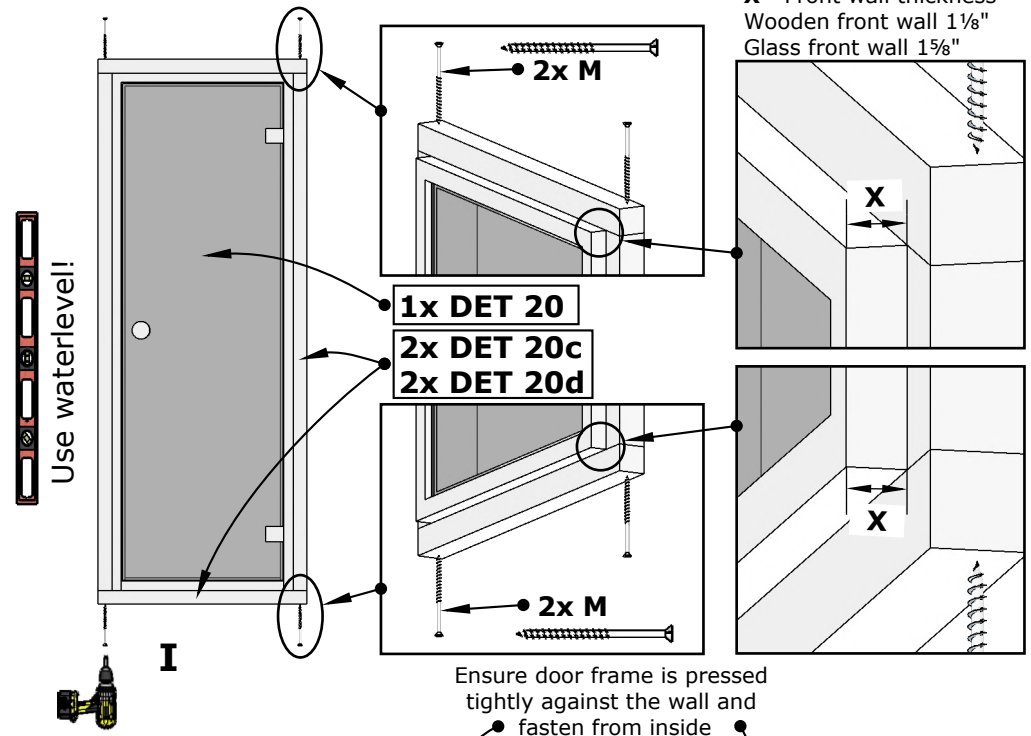

X= Front wall thickness
Wooden front wall 1⅛"
Glass front wall 1⅝"

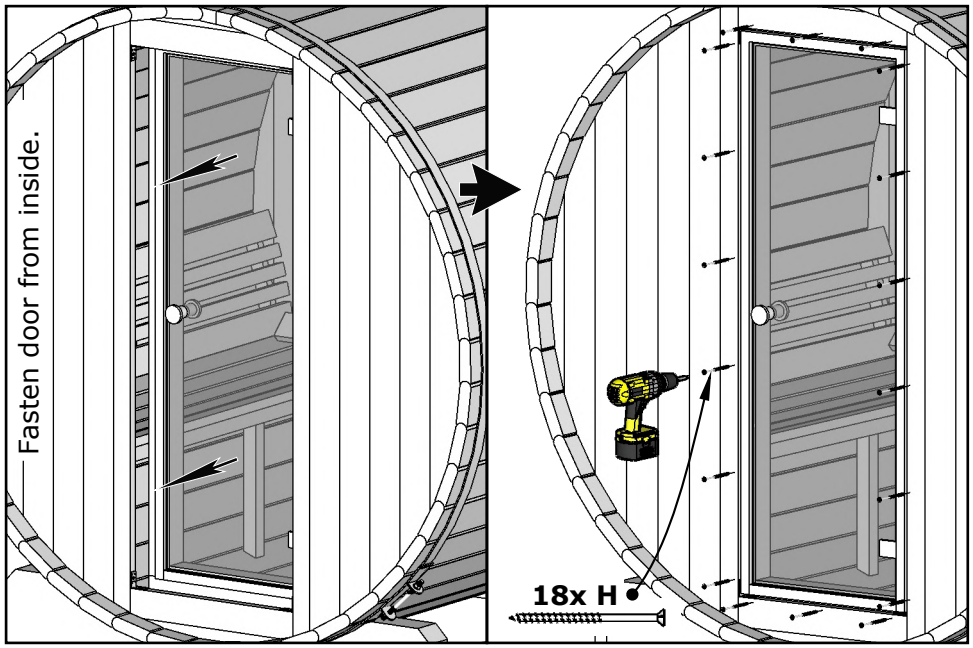

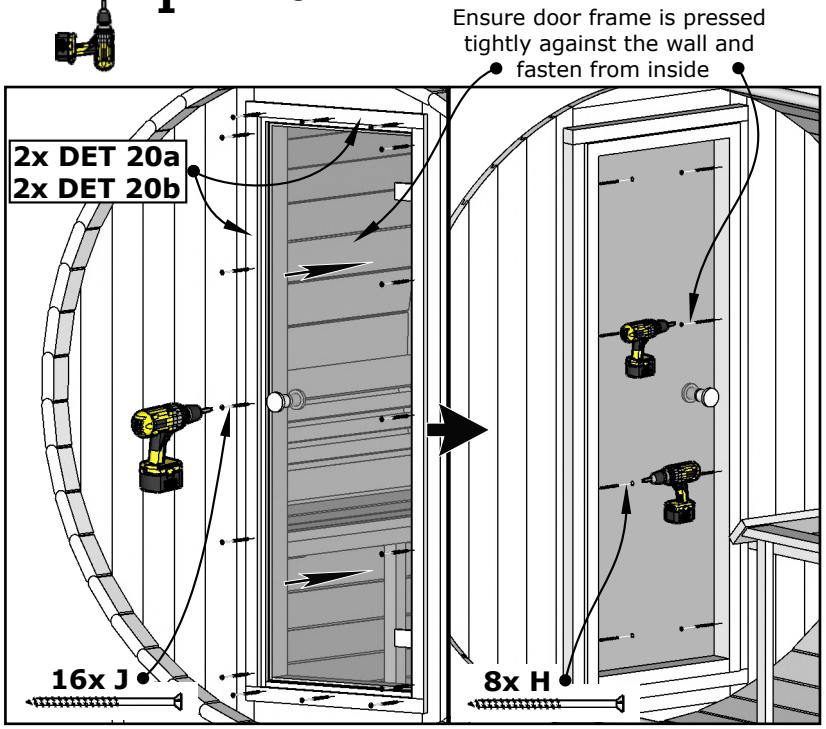

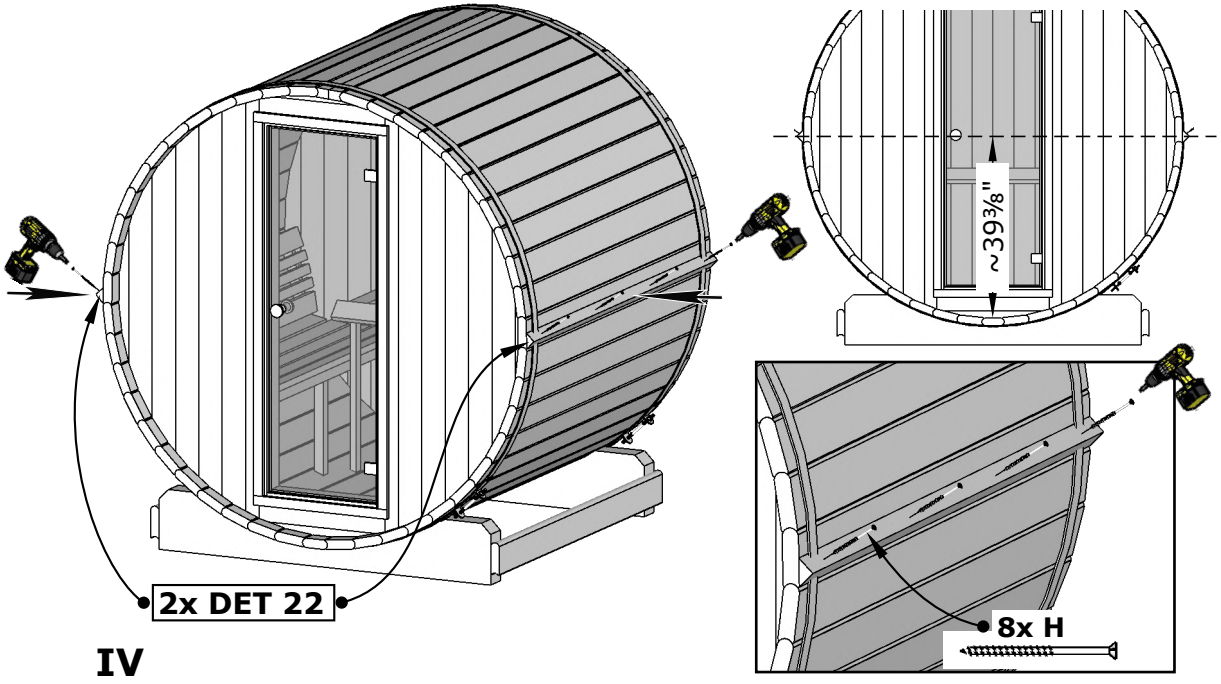

11.

E7 Barrel Sauna 71D" x 81H"

See the installation manual inside the shingles package

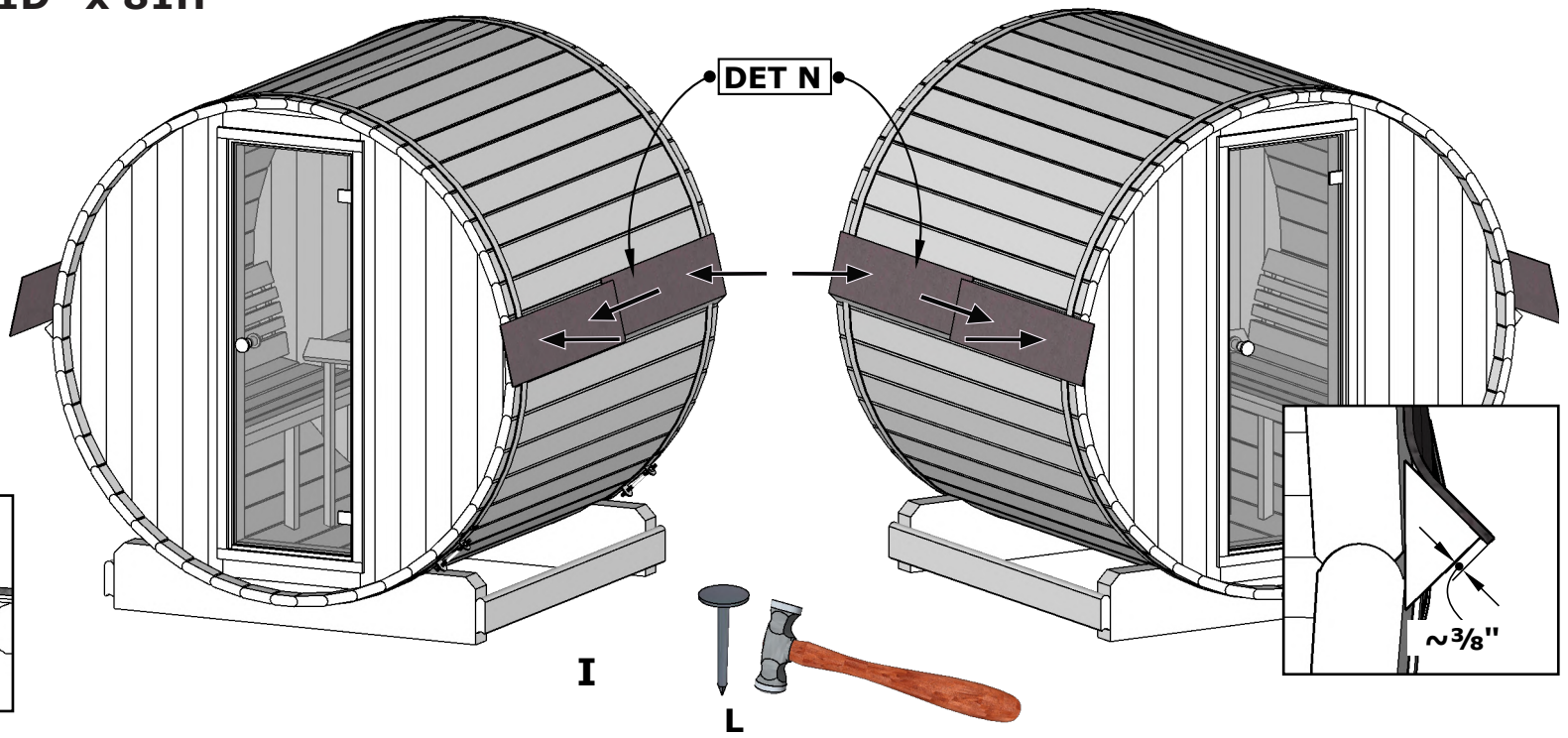

I

L

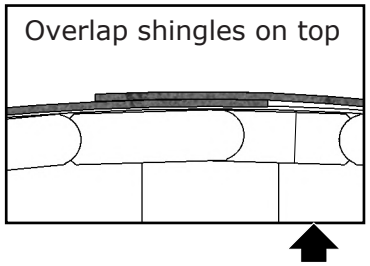

Check also roof shingles installation manual inside package.

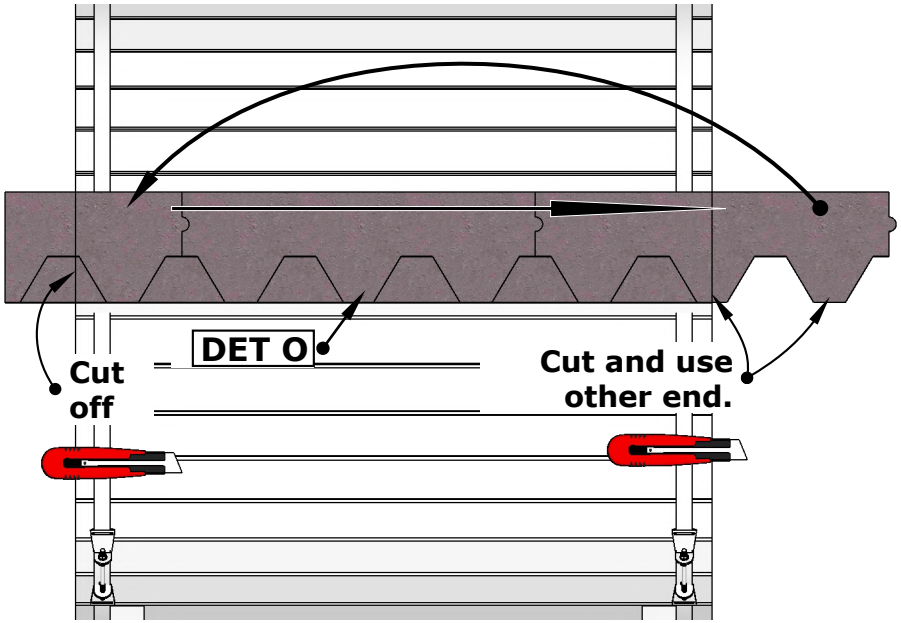

II

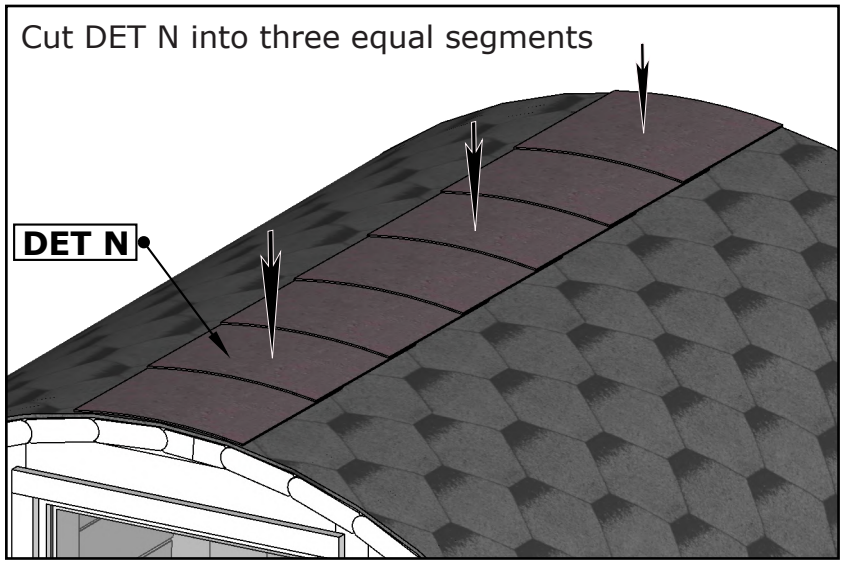

III

E7 Barrel Sauna 71D" x 81H"

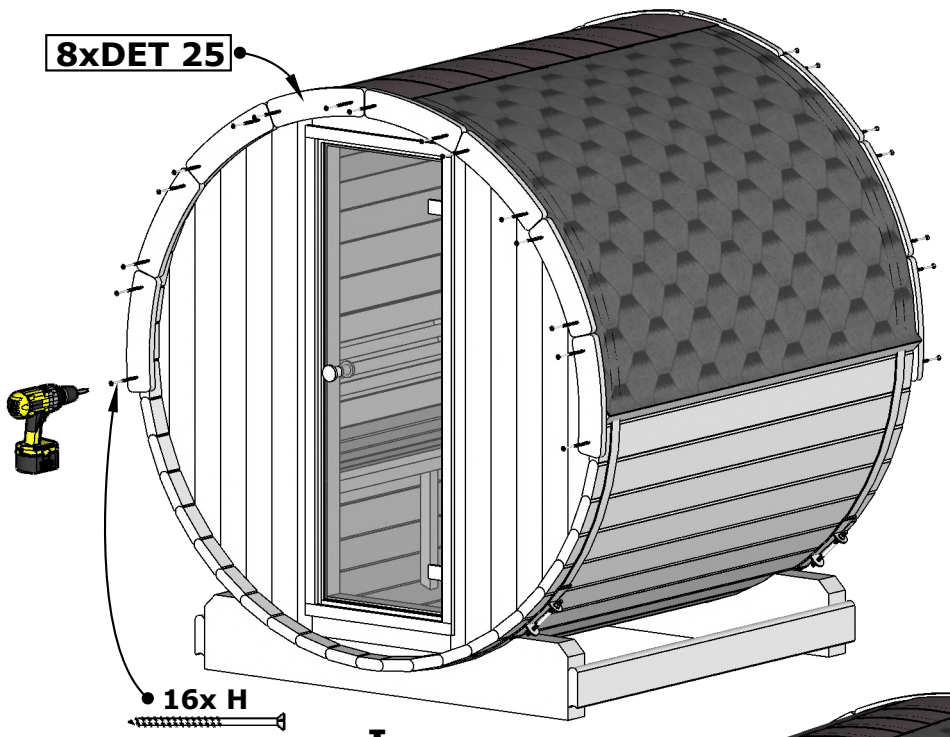

I

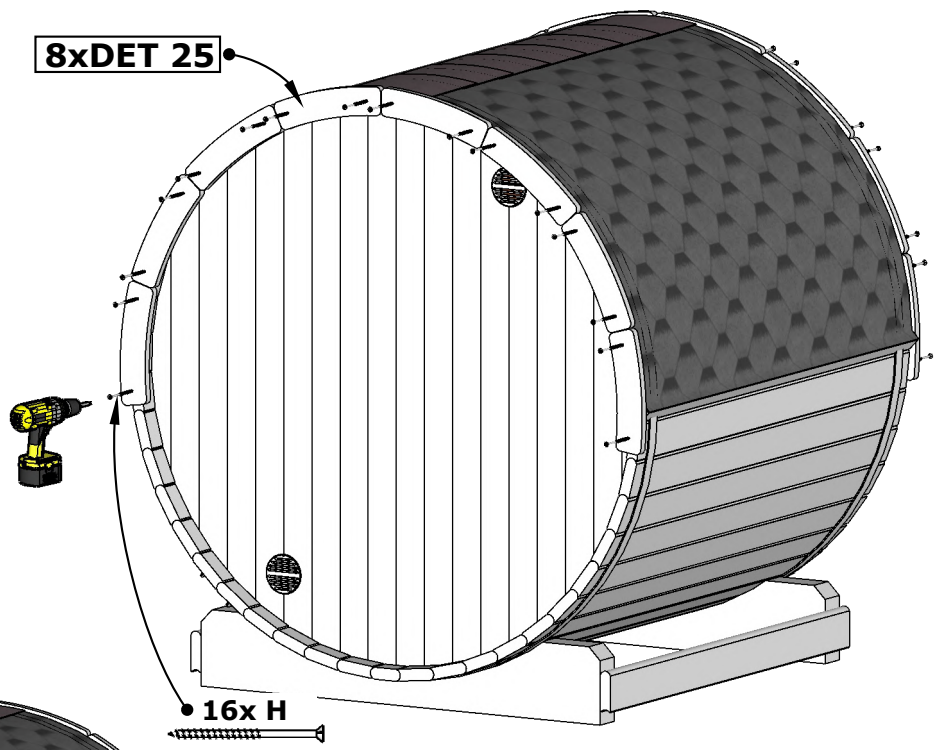

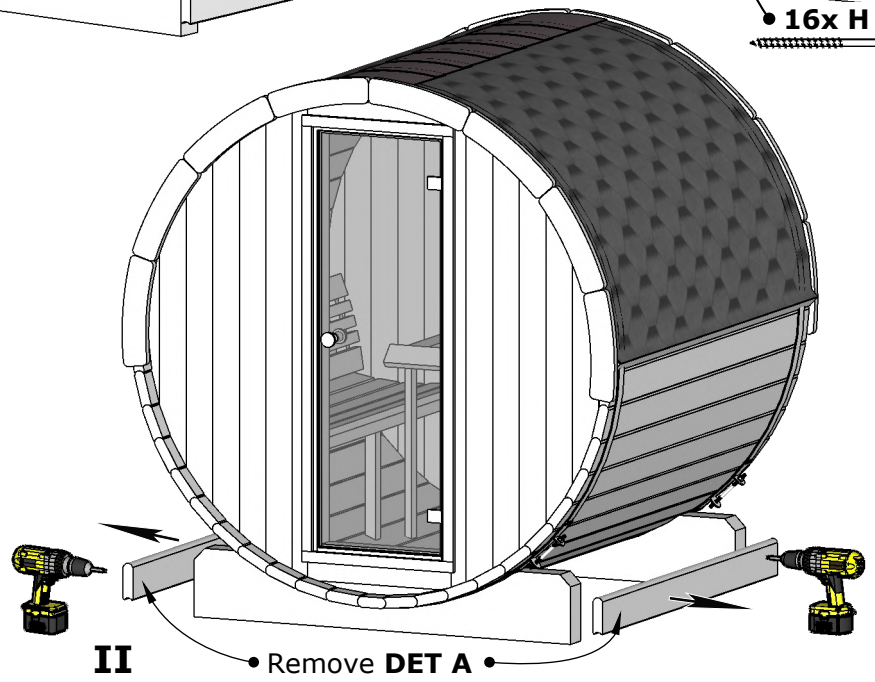

II